CT110 UY

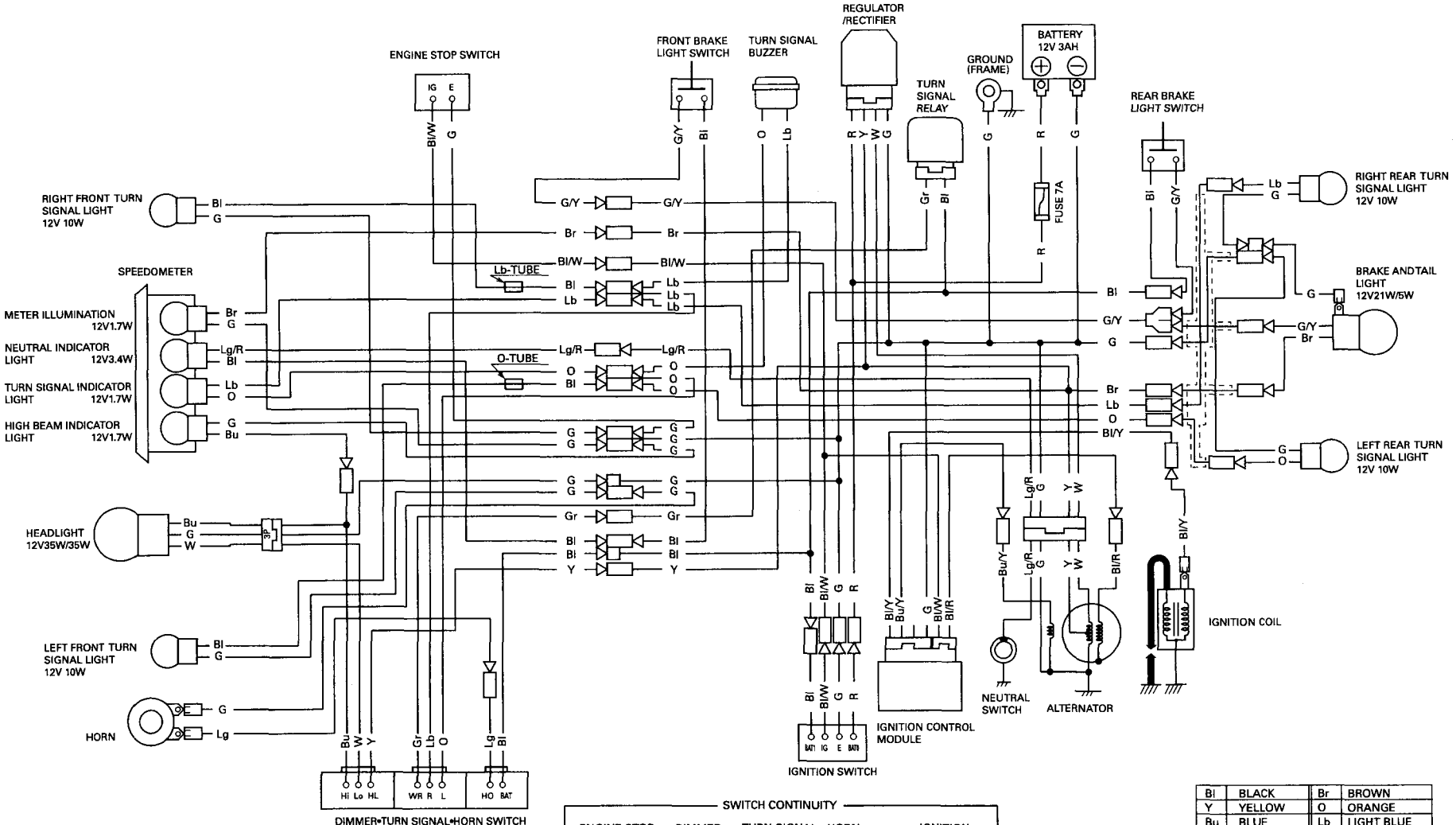

Bl	BLACK	Br	BROWN
Y	YELLOW	O	ORANGE
Bu	BLUE	Lb	LIGHT BLUE
G	GREEN	Lg	LIGHT GREEN
R	RED	P	PINK
W	WHITE	Gr	GRAY

0030Z-459-9800