WIRING DIAGRAM
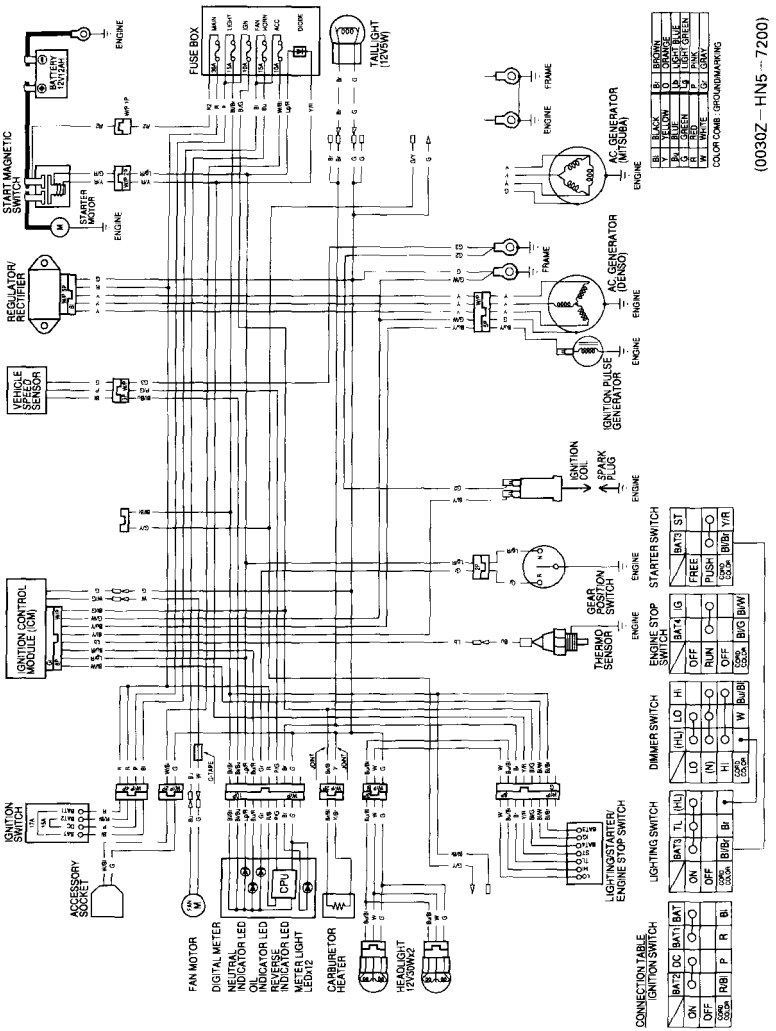
Canadian model