3. Remove the screws (1) (Fig. 4-5) and remove the air cleaner assembly (2) from the air cleaner housing.
4. Unscrew the clamp (3) and remove the mounting bracket (4).
5. Remove the air cleaner (5) from the air cleaner body (6).

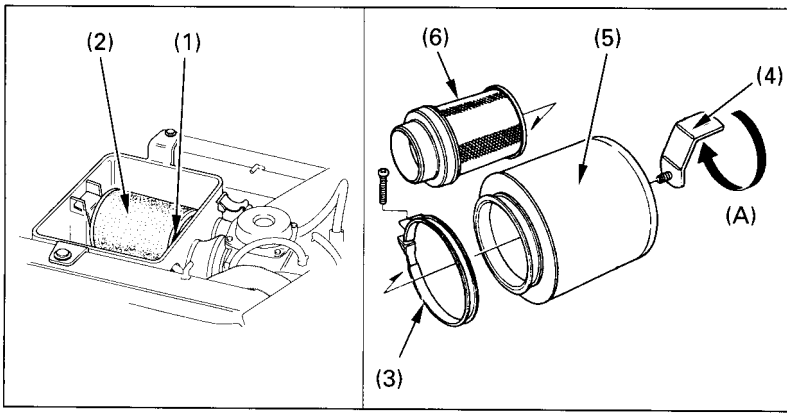

Fig. 4-5

(1) Screw
(2) Air cleaner assembly
(3) Clamp
(4) Mounting bracket
(5) Air cleaner
(6) Air cleaner body
(A) To release

6. Wash the air cleaner in nonflammable or high flash point solvent and allow it to dry thoroughly.

⚠ WARNING

POTENTIAL HAZARD

Using petrol or low flash point solvents for cleaning ATV parts.

WHAT CAN HAPPEN

A fire or explosion could result.

HOW TO AVOID THE HAZARD

Use only a nonflammable or high flash point solvent to clean ATV parts.