ENGINE OIL

Oil Filler Cap/Dipstick

The oil filler cap/dipstick (Fig. 2-27), on the rear crankcase cover, is used to measure the oil level. The oil should be checked each day before operating the FOURTRAX and maintained between the upper level mark (2) and the lower level mark (3).

For oil recommendations and instructions on checking, adding and changing oil, see pages 106 – 110.

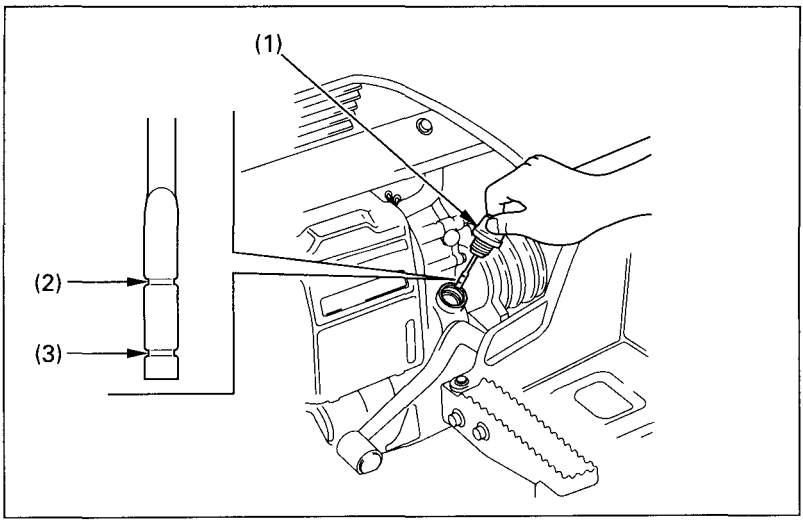

Fig. 2-27 (1) Oil filler cap/dipstick (2) Upper level mark (3) Lower level mark

While reading this manual, remember:

⚠WARNING **Indicates a strong possibility that serious injury or death may result if instructions are not followed.**