Parts Location

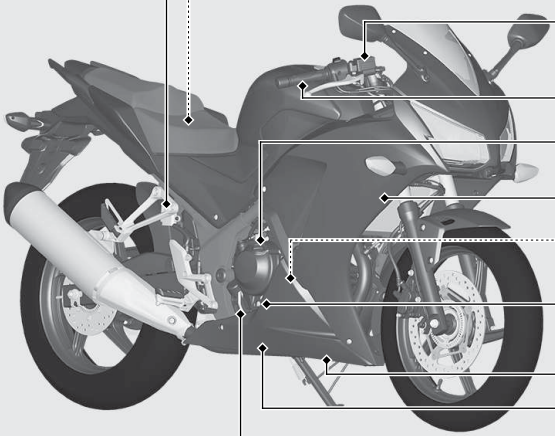

Rear brake fluid reservoir P.70

Battery P.53

Main fuse P.102

Fuse box P.101

ABS fuse CBR300RA P.103

Front brake fluid reservoir P.70

Throttle grip P.81

Engine oil fill cap P.63

Right middle cowl P.56

Engine oil filter P.65

Engine oil level inspection window P.63

Right under cowl P.59

Engine oil drain bolt P.65

Coolant reserve tank P.68