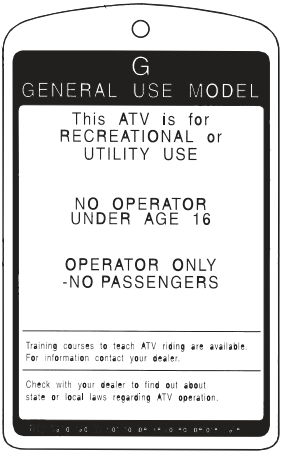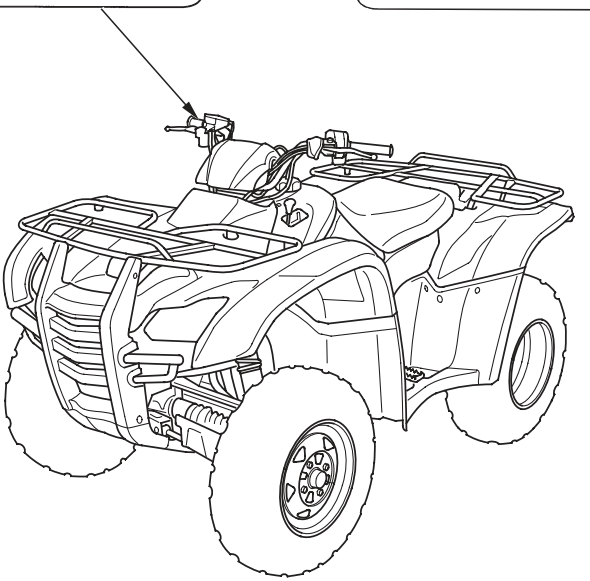Safety Labels